Appendix Ia of RNTPC
Paper No. A/HSK/630

Date: 27 October 2026

TPB Ref.: A/HSK/630

By Email

Town Planning Board
15/F, North Point Government Offices
333, Java Road
North Point
Hong Kong
(Attn: The Secretary)

Dear Sir,

Temporary Logistics Centre for a Period of 3 Years at Lots 1801 RP (Part), 1803 (Part), 1804 (Part), 1805, 1806 S.A (Part), 1806 S.B (Part), 1829 (Part), 1830 (Part), 1831 (Part), 1832 (Part), 1833 (Part) & 1836 (Part) in D.D. 125, Ha Tsuen, Yuen Long, N.T.

We are glad to submit the FSI proposal for your further processing of the captioned planning application.

Should you have any enquiries, please feel free to contact the undersigned at [redacted] at your convenience.

Yours faithfully,

Patrick Tsui

c.c. Tuen Mun and Yuen Long West District Planning Office (Attn: Mr. Henry TO) – By Email

PUMP SCHEDULE

DESCRIPTION	PRESSURE (BAR)	FLOW (L/MIN.)	PUMP SPEED (RPM)	PUMP RATING (KW)	POWER SUPPLY (volts/phases/Hz)
SPRINKLER JOCKEY PUMP (SJP-1)	5	60	2900 MAXIMUM	2.2 KW	380/3/50
TWO SPRINKLER PUMPS (SP-1 AS DUTY & SP-2 AS STAND-BY PUMP)	1.4 / 2.9 / 3.2	2250 / 1350 / 1100	2900 MAXIMUM	18.5 KW	380/3/50

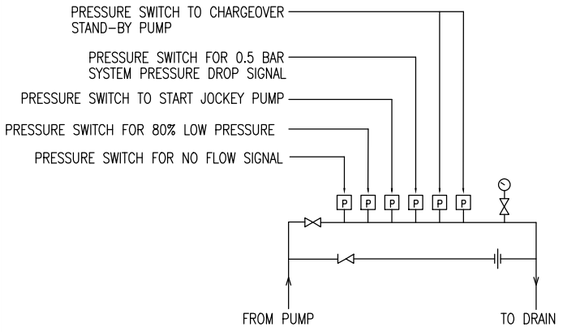

DETAIL ARRANGEMENT FOR 'P2'

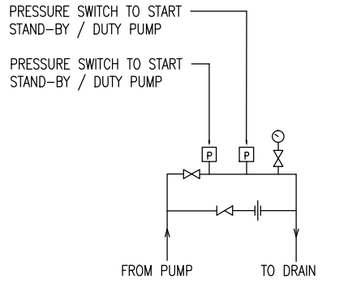

DETAIL ARRANGEMENT FOR 'P1'

CALCULATION OF SPRINKLER PIPE PRESSURE LOSS FOR SPR. CONTROL VALVE SET

RUN OF DISTRUBTION PIPE FROM CONTROL VALVE TO DESIGN POINT	PIPE SIZE (mm)	PIPE LENGTH (m)	FITTINGS	NOS.	EQU. LENGTH OF FITTINGS	TOTAL EQUIV. LENGTH OF FITTINGS	TOTAL EQUIV PIPE LENGTH
PIPE TO DESIGN POINT D	150	150.6	TEE	0			189.2
			GATE VALVE	0			
			BUTTERFLY VALVE	2	6.4	12.8	
			90°ELBOW	6	4.3	25.8	
PIPE TO DESIGN POINT D	100	41	TEE	0			41
			GATE VALVE	0			
			90°ELBOW	6			

REMARK:

IN ALL SECTIONS THE PRESSURE LOSS IN THE DISTRIBUTION PIPE IS LESS THAN 500 mb (0.5 BAR)
THE CALCULATION OF PIPE FRICTION LOSS IS BASED ON HAZEN-WILLIAMS FORMULA

$$P_1 = \frac{6.05 \times 10^5}{C^{1.85} X\ d^{4.87}} X\ L\ X\ Q^{1.85} \quad \text{(FOR 150mm)}$$

$$P_1 = (0.2\ X\ 10^{-8})\ X\ L\ X\ Q^{1.85}$$

$$P_1 = 0.146\ \text{BAR}$$

$$P_2 = \frac{6.05 \times 10^5}{C^{1.85} X\ d^{4.87}} X\ L\ X\ Q^{1.85} \quad \text{(FOR 100mm)}$$

$$P_2 = (1.5\ X\ 10^{-8})\ X\ L\ X\ Q^{1.85}$$

$$P_2 = 0.228\ \text{BAR}$$

TOTAL PRESSURE LOSS IN DISTRIBUTION PIPE FORM SPRINKLER CONTROL VALVE TO DESIGN POINT:

$$P = P_1 + P_2$$

$$P = 0.146 + 0.228$$

$$P = 0.374\ \text{(LESS THAN 0.5 BAR)}$$

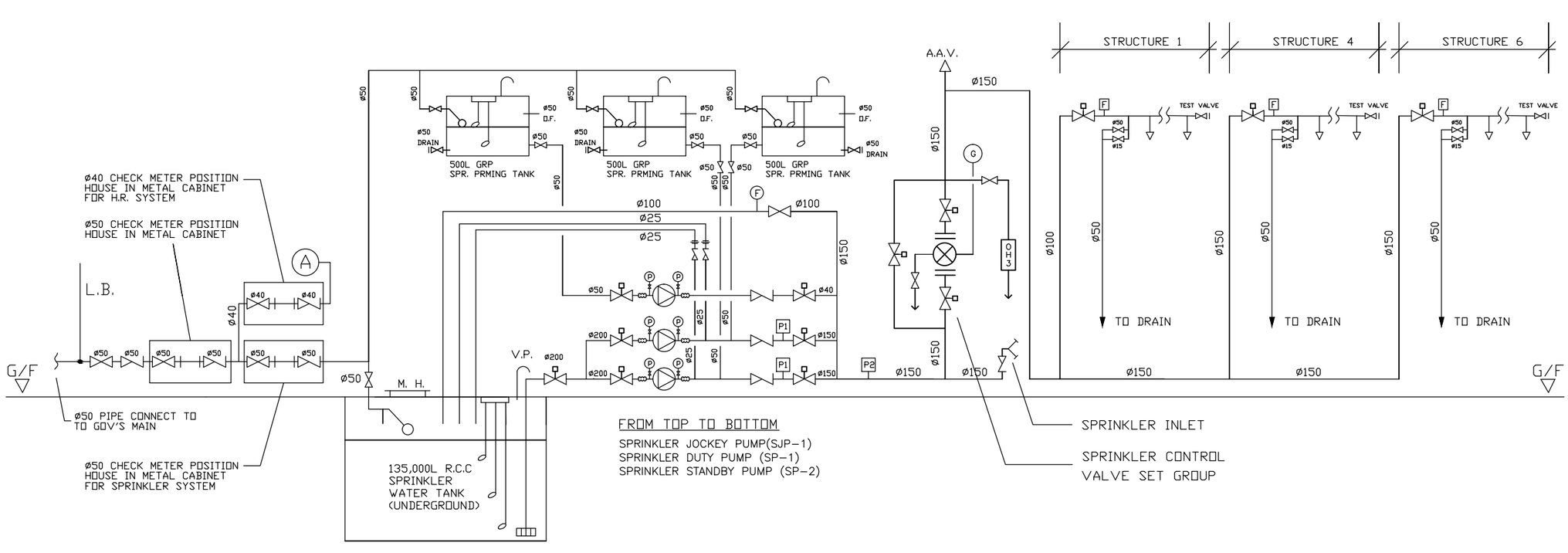

SPRINKLER SYSTEM SCHEMATIC DIAGRAM

REV	DESCRIPTION	DATE	BY
A	FSD SUBMISSION	20-11-2017	HY

FSI CONTRACTOR

East Power Engineering Limited

Flat A, 7/F., Hop Shing Commercial Building
41 Chi Kiang Street, Tokwawan, Kowloon
Fax. : 2394-3772 Tel. : 2397-3238

PROJECT

PROPOSED TEMPORARY LOGISTICS CENTRE FOR A PERIOD OF 3 YEARS AT LOTS 1801 RP (PART), 1803(PART), 1804(PART), 1805, 1806 S.A (PART), 1806 S.B (PART), 1829(PART), 1830(PART), 1831(PART), 1832(PART), 1833(PART) AND 1836(PART) IN D.D. 125, HA TSUEN, YUEN LONG, NEW TERRITORIES.

DRAWING TITLE

SCHEMATIC DIAGRAM FOR SPRINKLER SYSTEM

	INITIAL	DESIGNATION	DATE
DRAWN BY	HY	A.Eng	20-11-2017
DESIGNED BY	HY	A.Eng	20-11-2017
CHECKED BY	CM	PM	20-11-2017
APPROVED BY	-	-	-
PROJECT NO.	10320		
PAPER SIZE	A3	PLOT SCALE	1 : 1
DRAWING NO.	EP-10299-FS03		
SCALE	N. T. S.	REVISION	A

FIRE SERVICES NOTES:

1. HOSE REEL SYSTEM

1.1 HOSE REEL SHALL BE PROVIDED AT POSITIONS AS INDICATED ON PLANS.

1.2 THERE SHALL BE SUFFICIENT HOSE REELS TO ENSURE THAT EVERY PART OF THE BUILDING CAN BE REACHED BY A LENGTH OF NOT MORE THAN 30M OF HOSE REEL TUBING. ONE ACTUATING POINT AND ONE AUDIO WARNING DEVICE TO BE LOCATED AT EACH HR POINT. THE ACTUATING POINT SHOULD INCLUDE FACILITIES FOR THE FIRE PUMP START DEVICE INITIATION.

1.3 A MODIFIED HOSE REEL SYSTEM OF 2,000 LITRES WATER TANK TO BE PROVIDED FOR THE ENTIRE BUILDING AS INDICATED ON PLAN.

1.4 NO FIRE SERVICES INLET TO BE PROVIDED FOR THE MODIFIED HOSE REEL SYSTEM.

1.5 WATER SUPPLY FOR THE MODIFIED HOSE REEL SYSTEM TO BE SINGLE END FEED FROM THE GOVERNMENT TOWN MAIN.

1.6 TWO FIXED FIRE PUMPS (DUTY/STANDBY) TO BE PROVIDED AT SPR. & FS. PUMP ROOM.

1.7 THE HR SYSTEM INSTALLED SHOULD BE IN ACCORDANCE WITH PARA. 5.14 OF THE CODE OF PRACTICE FOR MINIMUM FIRE SERVICE INSTALLATION AND EQUIPMENT 2012.

1.8 AN INSTRUCTION PLATE SHALL BE PROVIDED NEXT TO THE BREAK GLASS UNIT FOR OPERATION OF HOSE REEL.

2. AUTOMATIC SPRINKLER SYSTEM

2.1 AUTOMATIC SPRINKLER SYSTEM SUPPLIED BY A 135,000L SPRINKLER WATER TANK AND HAZARD CLASS OH3 SHALL BE PROVIDED TO THE ENTIRE BUILDING/STRUCTURE IN ACCORDANCE WITH LPC RULES INCORPORATING BS EN12845 : 2003 AND FSD CIRCULAR LETTER 3/2006 & 3/2012. THE SPRINKLER TANK, SPRINKLER PUMP ROOM, SPRINKLER INLET AND SPRINKLER CONTROL VALVE GROUP SHALL BE CLEARLY MARKED ON PLANS.

2.2 THE CLASSIFICATION OF THE AUTOMATIC SPRINKLER INSTALLATION TO BE ORDINARY HAZARD GROUP 3.

2.3 ONE NUMBER OF 135,000 LITRES SPRINKLER WATER TANK TO BE PROVIDED AS INDICATED ON PLANS.

2.4 ALL INSTALLED SPRINKLER SHOULD BE PENDENT TYPE AND THE TEMPERATURE RATING OF SPRINKLER HEAD SHALL BE 68°C UNLESS OTHERWISE SPECIFIED.

2.5 SPRINKLER CONTROL VALVE SET AND SPRINKLER INLET TO BE PROVIDED AS INDICATED ON PLANS.

2.6 ALL SPRINKLER PIPE SIZE SHOULD BE ø32mm UNLESS SPECIFY.

3. FIRE ALARM SYSTEM

3.1 FIRE ALARM SYSTEM SHALL BE PROVIDED THROUGHOUT THE ENTIRE BUILDING IN ACCORDANCE WITH BS 5839-1 : 2002 + A2 : 2008 AND FSD CIRCULAR LETTER NO.1/2009 & 3/2010 & 2/2012. ONE ACTUATING POINT AND ONE AUDIO WARNING DEVICE SHOULD BE LOCATED AT EACH HOSE REEL POINT. THE ACTUATION POINT SHOULD INCLUDE FACILITIES FOR FIRE PUMP START AND AUDIO / VISUAL WARNING DEVICE INITIATION.

3.2 AN ADDRESSABLE TYPE FIRE ALARM PANEL TO BE PROVIDED AND LOCATED FIRE CONTROL CENTRE AS INDICATED ON PLANS.

4. MISCELLANEOUS F.S. INSTALLATION

4.1 PORTABLE FIRE EXTINGUISHER WITH SPECIFIED TYPE AND CAPACITY TO BE PROVIDED AT LOCATIONS AS INDICATED ON PLANS.

4.2 SUFFICIENT EMERGENCY LIGHTING SHALL BE PROVIDED THROUGHOUT THE ENTIRE BUILDINGS/STRUCTURES IN ACCORDANCE WITH BS 5266: PART 1 AND BS EN 1838.

4.3 SUFFICIENT DIRECTIONAL AND EXIT SIGN SHALL BE PROVIDED IN ACCORDANCE WITH BS 5266: PART 1 AND FSD CIRCULAR LETTER 5/2008.

4.4 NO EMERGENCY GENERATOR TO BE PROVIDED FOR SERVING THE EMERGENCY POWER. DUPLICATED POWER SUPPLIES FOR ALL FIRE SERVICES INSTALLATIONS COMPRISING A CABLE CONNECTED FROM ELECTRICITY MAINS DIRECTLY BEFORE THE MAIN SWITCH.

4.5 WHEN A VENTILATION/ AIR CONDITIONING CONTROL SYSTEM TO A BUILDING IS PROVIDED, IT SHALL STOP MECHANICALLY INDUCED AIR MOVEMENT WITHIN A DESIGNATED FIRE COMPARTMENT.

4.6 NO DYNAMIC SMOKE EXTRACTION SYSTEM SHALL BE PROVIDED SINCE EITHER THERE BE NO FIRE COMPARTMENT EXCEEDING 7000 CUBIC METRES OR THE AGGREGATE AREA OF OPENABLE WINDOWS OF THE RESPECTIVE COMPARTMENT EXCEEDS 6.25% OF THE FLOOR AREA OF THAT COMPARTMENT.

ABBREVIATION

SPR.	SPRINKLER
F.H.	FIRE HYDRANT
H.R.	HOSE REEL
F.E.	FIRE EXTINGUISHER
CO_2	CARBON DIOXIDE
L.P.C.	LOSS PREVENTION COUNCIL
F.S.I.	FIRE SERVICES INSTALLATION
H/L	HIGH LEVEL
M/L	MID LEVEL
L/L	LOW LEVEL
F/A	FROM ABOVE
F/B	FROM BELOW
T/A	TO ABOVE
T/B	TO BELOW
U/G	UNDERGROUND
F.S.	FIRE SERVICES

COLOUR CODE

PIPE SIZES	COLOUR
ø25mm	LIGHT GREEN
ø32mm	RED
ø40mm	PURPLE
ø50mm	YELLOW
ø65mm	BLUE
ø80mm	GREEN
ø100mm	LIGHT BROWN
ø150mm	DEEP BROWN

DRAWING LIST

DRAWING NO	DESCRIPTION
EP-10320-FS01	FS NOTES, LEGEND, ABBREVIATIONS AND DRAWING LIST
EP-10320-FS02	PROPOSED FIRE SERVICES INSTALLATION LAYOUT PLAN

LEGEND (FOR LAYOUT PLAN)

H.R.	HOSE REEL W/ LOCKABLE GLASS FRONTED NOZZLE BOX, STRIKER, C/W FIRE ALARM BELL & BREAK GLASS UNIT
	150mm FIRE ALARM BELL
	BREAK GLASS UNIT
	SPRINKLER HEAD
F	FLOW SWITCH
	MONITORED GATE VALVE
	SPRINKLER ZONE SUBSIDIARY CONTROL VALVE ASSEMBLY INCLUDES ZONE SUBSIDIARY CONTROL VALVE, FLOW SWITCH, TEST GATE VALVE AND DRAIN VALVE
	GATE VALVE
	NON RETURN VALVE
	VORTEX INHIBITOR
	BALL FLOAT VALVE
P	PRESSURE SWITCH
	SPRINKLER / HOSE REEL PIPE
	SPRINKLER CONTROL VALVE SET
	CHECK METER POSITION
	SPRINKLER / F.S. INLET
F.E. $_{Co2}$	5Kg CO2 TYPE FIRE EXTINGUISHER
F.E. $_{D.P}$	4Kg DRY POWDER TYPE FIRE EXTINGUISHER
	PUMP
	150mm WATER ALARM GONG
	EMERGENCY LIGHTING
EXIT	EXIT SIGN
FAP	FIRE ALARM PANEL
	PUMP CONTROL PANEL
E	SELF-CONTAINED EMERGENCY FLUORESCENT LIGHTING UNIT
	EXISTING F. S. INSTALLTION

REV	DESCRIPTION	DATE	BY
A	FSD SUBMISSION	20-11-2017	HY

FSI CONTRACTOR

East Power Engineering Limited
Flat A, 7/F., Hop Shing Commercial Building
41 Chi Kiang Street, Tokwawan, Kowloon
Fax. : 2394-3772 Tel. : 2397-3238

PROJECT

PROPOSED TEMPORARY LOGISTICS CENTRE FOR A PERIOD OF 3 YEARS AT LOTS 1801 RP (PART), 1803(PART), 1804(PART), 1805, 1806 S.A (PART), 1806 S.B (PART), 1829(PART), 1830(PART), 1831(PART), 1832(PART), 1833(PART) AND 1836(PART) IN D.D. 125, HA TSUEN, YUEN LONG, NEW TERRITORIES.

DRAWING TITLE

FS NOTES, LEGEND, ABBREVIATIONS AND DRAWING LIST

	INITIAL	DESIGNATION	DATE
DRAWN BY	HY	A.Eng	20-11-2017
DESIGNED BY	HY	A.Eng	20-11-2017
CHECKED BY	CM	PM	20-11-2017
APPROVED BY	-	-	-
PROJECT NO.	10320		
PAPER SIZE	A3	PLOT SCALE	1 : 1
DRAWING NO.	EP-10320-FS01		
SCALE	N. T. S.	REVISION	A

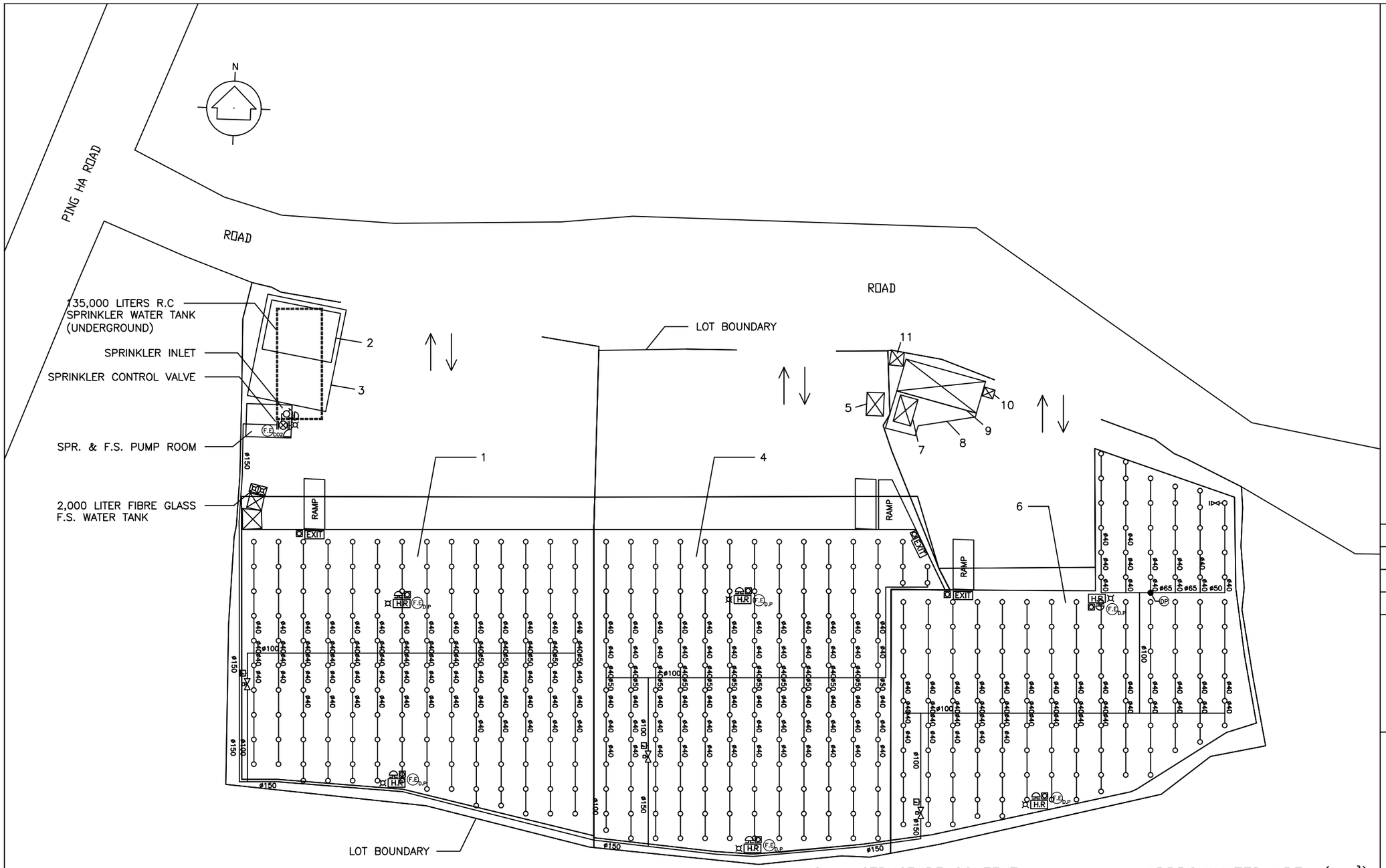

NO	STRUCTURE CONTENT:	APPROXIMATED AREA (m^3)
1	TEMPORARY LOGISTIC CENTRE	1569
2	SITE OFFICE	52
3	SHED FOR STRUCTURE AS RAIN SHELTER	122
4	TEMPORARY LOGISTIC CENTRE	1589
5	SITE OFFICE	12
6	TEMPORARY LOGISTIC CENTRE	1377
7	SITE OFFICE	7
8	SHED FOR STRUCTURE AS RAIN SHELTER	30
9	SITE OFFICE	40
10	GUARD HOUSE	1
11	METER ROOM	3

REV	DESCRIPTION	DATE	BY
A	FSD SUBMISSION	20-11-2017	HY

FSI CONTRACTOR

East Power Engineering Limited

Flat A, 7/F., Hop Shing Commercial Building
41 Chi Kiang Street, Tokwawan, Kowloon
Fax. : 2394-3772 Tel. : 2397-3238

PROJECT

PROPOSED TEMPORARY LOGISTICS CENTRE FOR A PERIOD OF 3 YEARS AT LOTS 1801 RP (PART), 1803(PART), 1804(PART), 1805, 1806 S.A (PART), 1806 S.B (PART), 1829(PART), 1830(PART), 1831(PART), 1832(PART), 1833(PART) AND 1836(PART) IN D.D. 125, HA TSUEN, YUEN LONG, NEW TERRITORIES.

DRAWING TITLE

PROPOSED FIRE SERVICES INSTALLATION LAYOUT PLAN

	INITIAL	DESIGNATION	DATE
DRAWN BY	HY	A.Eng	20-11-2017
DESIGNED BY	HY	A.Eng	20-11-2017
CHECKED BY	CM	PM	20-11-2017
APPROVED BY	-	-	-
PROJECT NO.	10320		
PAPER SIZE	A3	PLOT SCALE	1 : 1
DRAWING NO.	EP-10320-FS02		
SCALE	1 : 500	REVISION	A

PUMP SCHEDULE

DESCRIPTION	PRESSURE (BAR)	FLOW (L/MIN.)	PUMP SPEED (RPM)	PUMP RATING (KW)	POWER SUPPLY (volts/phases/Hz)
TWO FIRE SERVICES PUMPS (FP–1 AS DUTY & FP–2 AS STANDBY PUMP)	5	60	2900 MAXIMUM	2.2KW	380/3/50

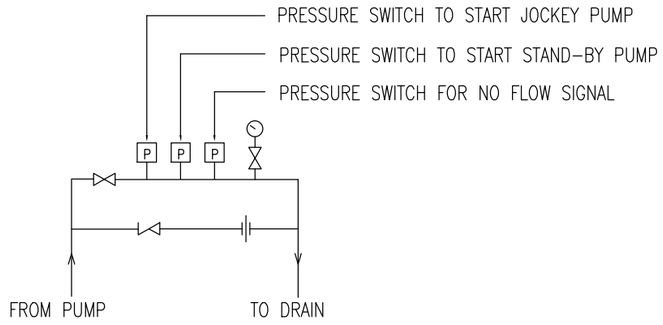

DETAIL ARRANGEMENT FOR 'P3'

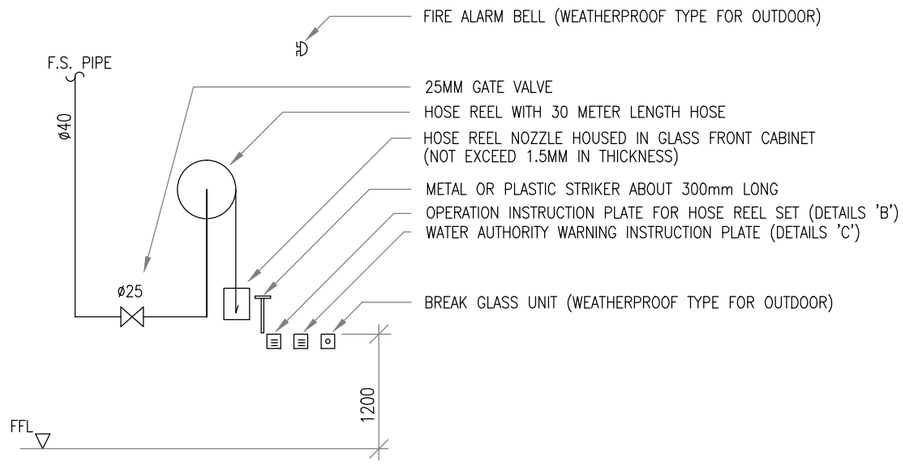

TYPICAL ARRANGEMENT OF HOSE REEL

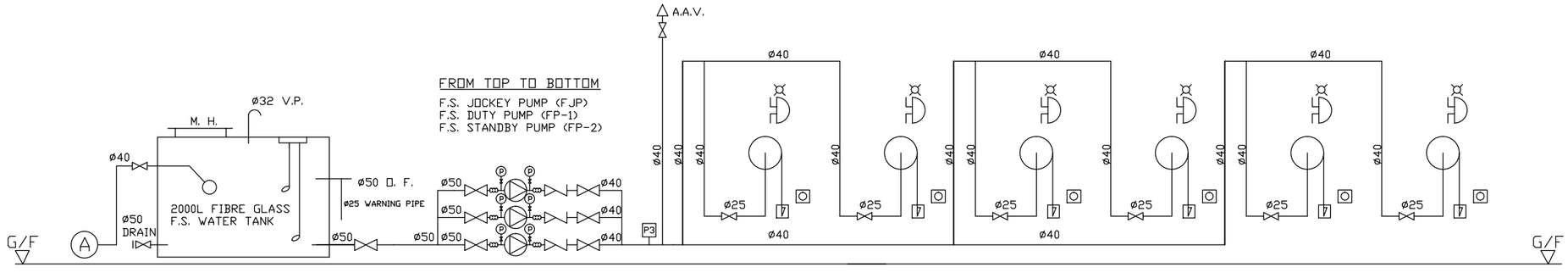

SCHEMATIC DIAGRAM FOR HOSE REEL SYSTEM

REV	DESCRIPTION	DATE	BY
A	FSD SUBMISSION	20–11–2017	HY

FSI CONTRACTOR

East Power Engineering Limited

Flat A, 7/F., Hop Shing Commercial Building
41 Chi Kiang Street, Tokwawan, Kowloon
Fax. : 2394–3772 Tel. : 2397–3238

PROJECT

PROPOSED TEMPORARY LOGISTICS CENTRE FOR A PERIOD OF 3 YEARS AT LOTS 1801 RP (PART), 1803(PART), 1804(PART), 1805, 1806 S.A (PART), 1806 S.B (PART), 1829(PART), 1830(PART), 1831(PART), 1832(PART), 1833(PART) AND 1836(PART) IN D.D. 125, HA TSUEN, YUEN LONG, NEW TERRITORIES.

DRAWING TITLE

SCHEMATIC DIAGRAM FOR HOSE REEL SYSTEM

	INITIAL	DESIGNATION	DATE
DRAWN BY	HY	A.Eng	20–11–2017
DESIGNED BY	HY	A.Eng	20–11–2017
CHECKED BY	CM	PM	20–11–2017
APPROVED BY	–	–	–
PROJECT NO.	10320		
PAPER SIZE	A3	PLOT SCALE	1 : 1
DRAWING NO.	EP–10299–FS04		
SCALE	N. T. S.	REVISION	A

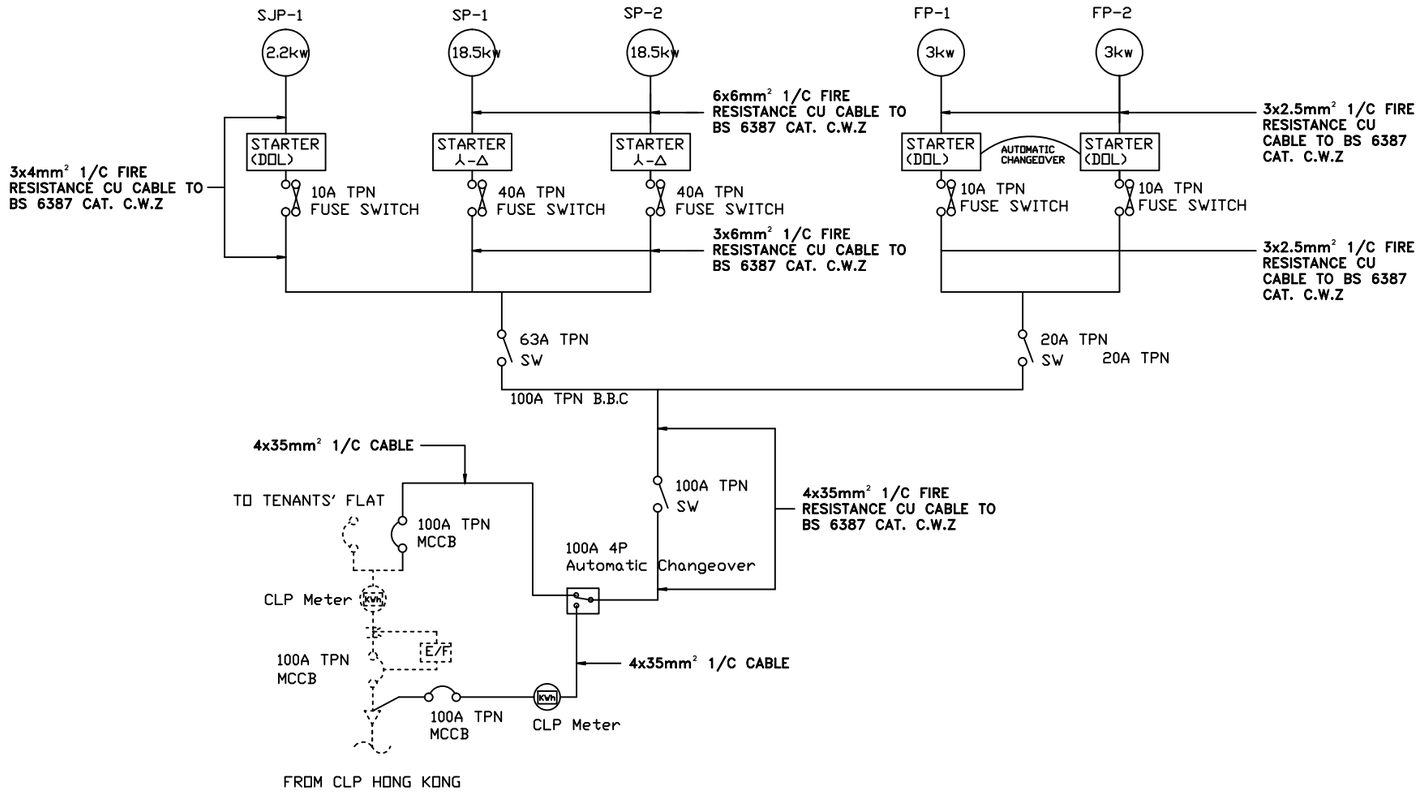

POWER DISTRIBUTION DIAGRAM FOR SPRINKLER AND FIRE SERVICE PUMPS

REV	DESCRIPTION	DATE	BY
A	FSD SUBMISSION	20-11-2017	HY

FSI CONTRACTOR

East Power Engineering Limited

Flat A, 7/F., Hop Shing Commercial Building
41 Chi Kiang Street, Tokwawan, Kowloon
Fax. : 2394-3772 Tel. : 2397-3238

PROJECT

PROPOSED TEMPORARY LOGISTICS CENTRE FOR A PERIOD OF 3 YEARS AT LOTS 1801 RP (PART), 1803(PART), 1804(PART), 1805, 1806 S.A (PART), 1806 S.B (PART), 1829(PART), 1830(PART), 1831(PART), 1832(PART), 1833(PART) AND 1836(PART) IN D.D. 125, HA TSUEN, YUEN LONG, NEW TERRITORIES.

DRAWING TITLE

POWER DISTRUBUTION DIAGRAM FOR SPRINKLER & FIRE SERVICE PUMPS

	INITIAL	DESIGNATION	DATE
DRAWN BY	HY	A.Eng	20-11-2017
DESIGNED BY	HY	A.Eng	20-11-2017
CHECKED BY	CM	PM	20-11-2017
APPROVED BY	-	-	-
PROJECT NO.	10320		
PAPER SIZE	A3	PLOT SCALE	1 : 1
DRAWING NO.	EP-10243-FS07		
SCALE	N. T. S.	REVISION	A